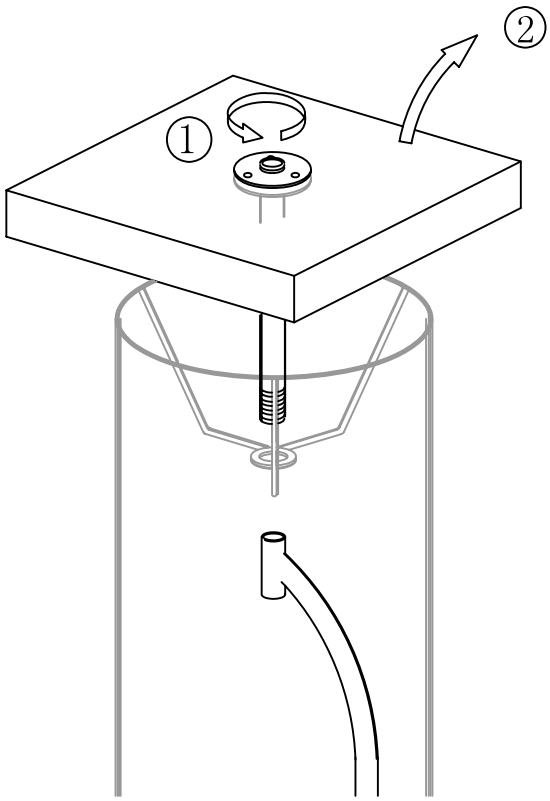

A

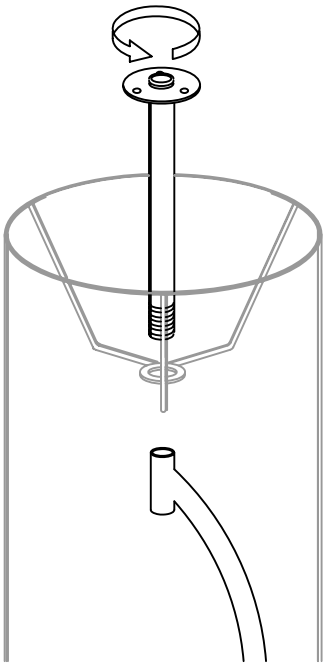

B

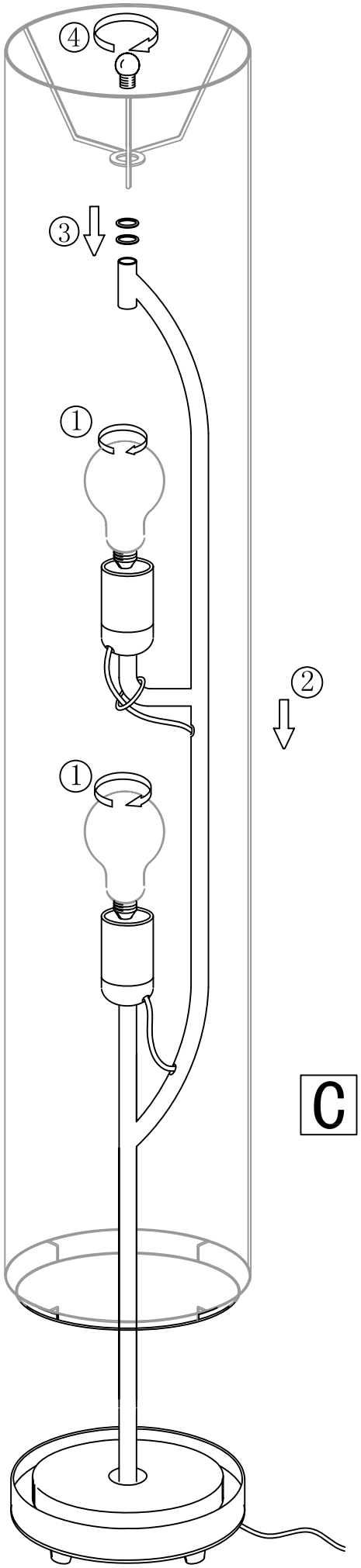

C

BLA82807-1